Geowall: Investigations into Low-Cost Stereo Display Technologies

By Daniel R. Steinwand,[1] Brian Davis,[1] and Nathan Weeks[1]

Open-File Report 03-198

[1] USGS, EROS Data Center, SAIC, Sioux Falls, SD 57198-0001. Work performed under U.S. Geological Survey contract 03CRCN0001.

U.S. Department of the Interior
U.S. Geological Survey

CONTENTS

Key Words …… 4

Abstract …… 4

Introduction …… 5

Background …… 5

Partners …… 6

System Configuration …… 6

Data Requirements, Software, and Processing …… 17

Supporting Investigations …… 20

Selected References …… 26

Important Web Sites…… 26

ILLUSTRATIONS

Figure 1. Overview of EDC Geowall Systems …… 7

2. The fixed Geowall computer …… 8

3. The portable Geowall computer …… 8

4. The Windows-based Geowall computer ……..…….. 9

5. The Macintosh Geowall system …….. 10

6. GeForce 4 Ti4600……..……. 11

7. Quadro4 900 XGL ……. 11

8. InFocus LP350 projectors …….. 11

9. Projector ceiling mount …….…….. 12
.
10. Portable system projector mount ……..….. 12

11. Polarization filter and mount …….…….…….. 13

12. Front projection, polarization-preserving white screen……..…… 13

13. The portable, rear-projection, polarization-preserving black screen….. 14

14. Disposable glasses ……...…… 15

15. Clip-ons …… 15

16. Framed glasses …… 15

17. Glasses with circular polarization …….…….……...…… 16
.
18. Chromium's setup for tiled displays …… 20

19. The OpenDX "Visual Program" display ….…….……...……..….. 22

20. The OpenDX Data Import user interface …….……..……...…. 23

21. The Mkiv processing flow...……... 25

Abstract

Recently, the combination of new projection technology, fast, low-cost graphics cards, and Linux-powered personal computers has made it possible to provide a stereoprojection and stereoviewing system that is much more affordable than previous commercial solutions. These Geowall systems are low-cost visualization systems built with commodity off-the-shelf components, run on open-source (and other) operating systems, and using open-source applications software. In short, they are "Beowulf-class" visualization systems that provide a cost-effective way for the U. S. Geological Survey to broaden participation in the visualization community and view stereoimagery and three-dimensional models[2].

Key Words

Visualization, Three-Dimensional Visualization, Stereo Visualization, Immersive Environments, Parallel Processing, Beowulf Clusters, High-Performance Computing, Modeling

[2] Any use of trade, product, or firm names is for descriptive purposes only and does not imply endorsement by the U.S. Government.

Introduction

The project described in this paper is a continuation of work that began in fiscal year (FY) 2000 with the identification of individuals at U.S. Geological Survey (USGS) Mapping Centers interested in building an information science research infrastructure within the Geography Discipline (then named the National Mapping Division). At that time, employees at USGS sites including the EROS Data Center (EDC) in Sioux Falls, South Dakota, the EDC/Alaska Field Office (AFO) in Anchorage, Alaska, the Mid-Continent Mapping Center (MCMC) in Rolla, Missouri, and the Rocky Mountain Mapping Center (RMMC) in Denver, Colorado, prepared and submitted a research proposal to begin investigations into high-performance computing. A follow-on proposal for continued funding, approved for FY 2001, and later for FY 2002, has enabled the participating Centers to make performance and communication enhancements on their existing clusters and to test various applications on these systems.

A close companion to the computation of numerical models and large-scale image processing is the visualization of these results and datasets. For FY 2002, part of the Beowulf project has focused on methods to visualize the results of these computations in two and three (stereo) dimensions. This part of the project was done at the USGS EROS Data Center, resulting in the EDC Geowall systems –low-cost visualization systems built with commodity off-the-shelf components, run on open-source (and other) operating systems, and using open-source application software. In short, they form “Beowulf-class” visualization systems, which have provided a cost-effective way for the USGS to broaden participation in the visualization community.

Background

Recently, the combination of new projection technology, fast low-cost graphics cards, and Linux-powered personal computers has made it possible to provide a stereoprojection and stereoviewing system that is much more affordable than previous commercial solutions. The Geowall project makes use of these components to view stereoimagery and three-dimensional models in a low-cost environment.

The concepts behind this type of stereoprojection system are fairly simple. Prepare two images, a right eye view and a left eye view, and display them on the same space on a screen. This is achieved by using two projectors—one for each eye, so that the viewer sees only one image with each eye. The light from each projector is polarized differently, and the projection screen has special properties that preserve polarization. The viewer wears polarized glasses, which allow the light from only one image to enter the eye.

The use of stereoprojection systems can aid in presenting complex spatial relationships in a several disciplines. The USGS has been using stereo aerial

photographs and stereopairs in cartographic work for many years. This computer-based implementation of those familiar concepts has the potential for bringing stereoviewing to a large number of audiences. It also adds computer-driven, interactive capabilities that have not yet been fully explored. As the Geography Disciple looks to the future with *The National Map*, these types of visualization systems aid in telling the story of the landscape, allowing the viewer to see topographic features seen in 3D.

Partners

The Geowall project was originated by the university members of the Geowall Consortium. The Geowall Consortium is an informal group that communicates and shares information on stereodisplay technologies. Researchers at the EDC soon became involved with the project; the team at EDC built the third system known to have existed. Active partners in our research include the following:

- University of Minnesota Department of Geology and Geophysics
- University of Michigan Department of Earth Sciences and Media Union
- University of Illinois – Chicago's Electronic Visualization Laboratory
- Arizona State University Department of Geological Sciences

The Geowall Consortium maintains a Web site at http://Geowall.org/. This site contains technical information and discussions of the latest developments, as well as postings of open-source software and shared datasets.

System Configuration

This document describes the Geowall systems installed at the EDC, which currently has two Geowall systems. One is permanently mounted in the Showcase Visualization Laboratory (ShowViz Lab); the other is a portable system that also resides in the ShowVIz Lab when it is not being used elsewhere.

A Geowall system can be configured to meet specific needs. At the time this report was prepared, the EDC systems were configured with the specific components listed in figure 1.

The cost of these components will vary, depending upon requirements. These requirements can be determined by considering the following issues:

- Location and size of the venue
- Size of the screen
- Front projection versus rear projection
- Ceiling-mounted projectors versus table-top projectors

- Robustness of the computer system
- Type of frames for glasses, paper versus framed, which may be determined by the venue

The sections that follow describe each of these components in detail.

Component	Portable	Fixed
1. Computers	Dell Intel	Dell Intel Gateway Intel MAC G4
2. Operating systems	Red Hat 7.3	Red Hat 7.3 Windows 2000 MAC OS-X
3. Graphics card	GeForce4 Ti 4600	GeForce4 Ti 4600 GeForce4 Ti 4600 Quadro4 900 XGL
4. Projectors (2x)	InFocus LP530	InFocus LP530
5. Projector alignment	Table-top stacker	Ceiling mounts
6. Polarization filters and mounts (x2)	Hoya 72-mm PL	Hoya 72-mm PL
7. Polarization-preserving Screen	Stewart Filmscreen Rear Black Wheeled stand	Stewart Filmscreen Front White Wall-mounted
8. Polarized glasses	paper clip-ons framed	paper clip-ons framed
9. Applications 9.1. coanim 9.2. immersaview 9.3. viewer 9.4. DataRequestDelivery 9.5. WallView 9.6. walkabout 9.7. ROMA	 Linux Linux Linux Linux Linux	 Linux Linux, Windows, Mac OS X Linux, Windows Linux Windows Mac OS X Windows

Figure 1. Overview of EDC Geowall systems.

Computers

The mounted system residing in the ShowViz Lab and connected to the same network switch as the EDC Beowulf Cluster system (Crane and others, 2001) is a Dell Precision Workstation 530 (fig. 2).

Figure 2. The fixed Geowall computer.

This system runs dual Intel Xeon 1.5-GHz CPUs, has 1 gigabyte of memory, an nVIDIA GeForce4 Ti 4600 graphics card, a 36-gigabyte SCSI disk, and an additional 73-gigabyte SCSI disk. This system currently runs Red Hat Linux 7.3.

The portable system configured on a wheeled cart is a Dell Precision Workstation 220 (fig. 3). This system contains dual Intel Pentium III 800-MHz CPUs, 512-MB memory, an nVIDIA GeForce4 Ti 4600 graphics card, and two 40-gigabyte IDE disks. This system also runs the Red Hat 7.3 version of Linux.

Figure 3. The portable Geowall computer.

Two other systems, also in the ShowViz Lab, support the Geowall concept. Although these are general-purpose computers not dedicated to the Geowall project, they provide an alternate viewing environment for those users who are not comfortable with the Linux operating system.

The first of these systems is a Gateway E-6000 system running Windows 2000 (fig. 4). This computer is equipped with an Intel Pentium 4 2.0-GHz CPU, 1 gigabyte of memory, an nVIDIA Quadro4 900 XGL graphics card, and one 80-gigabyte disk. The dual-head graphics card powers either two monitors or the two ceiling-mounted Geowall projectors. For non stereo presentations, only one projector is used.

Figure 4. The Windows-based Geowall computer.

The second general-purpose system in the lab is an Apple Macintosh G4 system running the OS-X Unix-based operating system (fig. 5). This computer also has a dual display setup that can be used for Geowall applications. It is equipped with dual 1-gigahertz PowerPC G4 CPUs, 1.5 gigabytes of memory, an nVIDIA GeForce4 Ti 4600 graphics card, and two 80-gigabyte SCSI disks.

Figure 5. The Macintosh Geowall system.

Graphics Cards for Dual-Monitor Output

The Geowall systems contain a graphics card with dual-monitor output. These cards are popular with users of dual-monitor scientific workstations, with graphics professionals who require two monitors, and with the video game community. The prices of these cards have recently gone from thousands to hundreds of dollars. The EDC Geowall systems are based around the nVIDIA GeForce 4 Ti4600 cards (fig. 6). These cards will drive two separate monitors (or projectors in our implementation) and are OpenGL capable. In the Windows 2000 system, EDC currently runs an nVIDIA Quadro4 XGL 900 card (fig. 7), which is a higher performance card aimed at the scientific and professional graphics community.

Figure 6. GeForce 4 Ti4600.

Figure 7. Quadro4 900 XGL.

Projectors

Two InFocus LP530 DLP projectors (fig. 8) are ceiling mounted (fig. 9) in the ShowViz Lab. The lab also hosts the EDC Beowulf cluster, allowing the visualization host driving the projector display to be on the same network switch as the cluster.

Figure 8. InFocus LP350 projectors.

Two additional InFocus LP530 DLP projectors are configured on a wheeled cart for the portable system (fig. 10). This system is designed to demonstrate the Beowulf visualization capabilities in rooms throughout the EDC. It can also be shipped to remote locations to demonstrate and present the Beowulf visualization system capabilities in a non-interactive format.

Projector Alignment

This ceiling mount bracket (fig. 9) provides a permanent alignment of the projectors in the ShowViz Lab. Alignment screws in the hardware allow adjustment and lock-down. The ShowViz Lab has a (previously installed) computer video switch that enables the routing of computer video signals from any of the systems in the room to the projector(s).

Figure 9. Projector ceiling mount.

The portable system (fig. 10) makes use of a modified 35-mm slide projector stacker. The Design and Fabrication staff at the EDC modified the stacker to allow alignment of the two projectors. This stacker has adjustments in each direction for each projector independent of the other. With this device, the projectors can be properly aligned to tolerance in less than 60 seconds. Previous alignment and mounting mechanisms and methods proved much less accurate and more time consuming.

Figure 10. Portable system projector mount.

The light polarization filters are Hoya 72-mm PL linear polarization filters. These are mounted onto the projector focus rings rotated 90 degrees relative to each other. The light passing through each of the separate filters is restricted to one specific polarity. These filter mounts allow the projector zoom ring, projector focus ring, and mounted filter to operate independently, which allows easy setup. The filter mounts were designed and made by staff at EDC (fig. 11).

Figure 11. Polarization filter and mount.

Circular polarization could also be used, but that requires separate left-handed and right-handed circular polarization filters with corresponding circularly polarized glasses. This configuration is not used in the EDC Geowall systems.

Screen

A polarization-preserving screen is necessary to maintain the polarization of the light filtered by the linear polarization filters. The fixed screen in the ShowViz Lab is a white, front-projection model (fig. 12). Any of the four systems (the two Linux-OS, Windows 2000, or Macintosh OS-X) with dual-monitor graphics cards can have their video signals routed to the projectors and imagery displayed on this screen.

Figure 12. Front projection, polarization-preserving white screen.

The portable screen is made of the same polarization-preserving material, but this screen has a rear-projection surface and is black so that the light passing through to the viewing audience will come only from the projectors (fig. 13). This screen is mounted on a portable stand on wheels and can be moved easily to

any location throughout the EDC. Also, it breaks down easily for packing and transport to remote locations.

Polarized-lens glasses are necessary to complement the splitting of the computer signal from each of two projectors by the polarization filters. The filter at the lens of each projector allows light traveling in a single plane to pass through, bounce off the screen, and strike the lens of the glasses. The two linear polarization filters are rotated 90 degrees relative to each other. The linear polarization lens glasses are constructed with this same polarization offset configuration and, therefore, allow the light from one projector to reach one eye of the human viewer.

Figure 13. The portable, rear-projection, polarization-preserving black screen.

Paper glasses are 25¢ each when purchased in bulk (fig. 14). These would be appropriate for a public venue where there is a risk of glasses being lost or damaged.

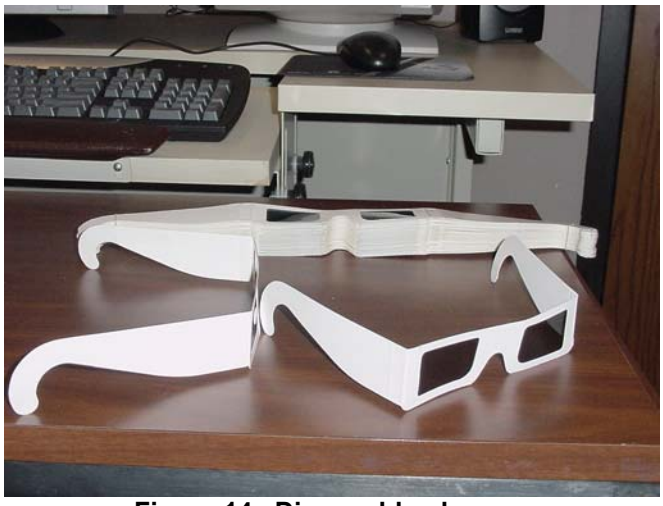

Figure 14. Disposable glasses.

Clip-on frames (fig. 15) allow the viewer to retain the use of prescription lenses, if necessary.

Figure 15. Clip-ons.

The framed glasses (fig. 16) are for viewers who do not normally wear glasses, but they also fit right over the top of most eyewear and provide a quick, easy way to begin viewing applications.

Figure 16. Framed glasses.

Circular filters and glasses (fig. 17) are available but are slightly more costly. A major advantage is that the rotation of the viewer's head has no negative effect, as it does with linear polarization. This is desirable for viewers who are moving around, as in a theme park venue. A major disadvantage is that great care must be used during setup and alignment, so using them for portable systems is impractical. Not all manufacturers produce both the left-hand and the right-hand circular polarization filters needed for this functionality.

Figure 17. Glasses with circular polarization.

Purchase and Maintenance Costs

At the time this report was written, the per system cost of these components ranged from $10,000 to $12,000. The actual cost of any individual system will be determined by the logistics requirements of the intended venue. Maintaining and operating most of these commodity components normally incurs no additional cost. Most include a 2- or 3-year parts warranty and will be obsolete and replaced at the end of that period.

System Administrator Requirements

The support costs of these systems are similar to that of maintaining a Unix Workstation. Part of a system administrator's time will be spent on initial setup as well as ongoing upgrades. An expert user must be able to install and learn visualization applications and conduct data format conversions. The development of custom software applications not provided by Consortium members will incur additional costs.

Data Requirements, Software, and Processing

Any stereopair image or photograph can be displayed on a Geowall. The USGS mainly uses Landsat satellite data and digital elevation models at this time. Any traditional three dimensional surface/texture model data can also be displayed and manipulated.

Applications Software

The Collaborative Animator (Coanim) was the first Geowall data viewing application. Coanim is an application for viewing three-dimensional content over AGAVE (Leigh and others, 2001) at the University of Illinois – Chicago's (UIC) Electronic Visualization Laboratory (EVL). It provides a flipbook playback of three-dimensional models. Coanim provides this capability to collaborating users on a network so that several users can playback, stop, and single step through the animation. Coanim relies on the CAVERNsoft toolkit for the networking support required for distributed users to collaboratively visualize data. IRIS Performer and CAVElib allow the Coanim application to run across various display architectures. Hence, a collaborator in a CAVE is able to work seamlessly with a collaborator on AGAVE. Coanim's viewing functionally has been replaced and surpassed by the newer, open-source application Immersaview.

Immersaview, also developed at the EVL, is an open-source viewing application for displaying, animating, and manipulating three-dimensional surface models draped with textures. The collaborative, network-sharing aspect of Coanim was not implemented. Data can be a single model or a flipbook of models that allows animation or single step-through. The software uses the Coin3D and fltk support packages. Immersaview is currently supported on the Linux, Windows, and Macintosh environments.

Viewer is a stereoimage pair viewer. This application enables pan, zoom, and step-animation of frames of stereoimages. Images can be actual stereopairs or pseudo-stereopairs generated with an algorithm implemented at the EDC.

Stereopair generation software was developed by the EDC on the basis of an algorithm originally proposed for viewing Landsat data in stereo (Batson and others, 1976). This algorithm takes an orthorectified, three-band image and a co-registered digital elevation model (DEM) and creates a synthetic left-eye view. The orthoimage is used as the right-eye view. The software is available on the Geowall Website.

Tviewer, written by researchers at the EDC, is a client-server prototype for the seamless display of Landsat imagery on the Geowall. The user can interactively select spectral band combinations, change vertical exaggeration, and fine-tune image alignment. Tviewer works in the following manner:

1. The server program starts, listening on a specified port.
2. The client program starts and establishes a connection with the server on the specified port.
3. The client sends information, such as viewing position, band combination, and so on. A second thread starts and listens for data from the server.
4. The server determines which DEM and band files are needed and creates left- and right-eye views using the specified band combination and vertical exaggeration.
5. The server cuts the resulting band-interleaved-by-pixel images into tiles and sends them to the client. Information telling the client where to display each tile is included, as well as which eye the tile is intended for.
6. The client's second thread gets the image data and puts it in a queue.
7. The client's main thread periodically checks the queue for new images. If it finds one, it loads it into texture memory and displays it at the specified location.

Ideally, the server will provide enough tiles to fill the client's window at all times. The client specifies how many megabytes of textures it will cache. When this limit has been reached, it will discard the "older" tiles as it receives new ones. The server is informed of this cache size at startup, so it knows which tiles the client has in its cache. Future plans include the implementation of the server-side process on the EDC Beowulf Cluster to enable realtime, interactive visualizations of very large datasets.

WallView is a stereopair image viewer for Windows platforms only. This stereoviewing application has an interface familiar to Windows application users and allows the input of additional image file formats, such as Joint Photographic Experts Group (JPEG) and Tagged Image File (TIF) formats.

Walkabout is a fly-by application developed by the EVL group and UIC. This application allows the user to move in relationship to the data in X-Y-Z directions and interact with the data by marking specific locations. The application, which was developed for the Mac OS X architecture, has the option to be controlled by a game controller instead of a standard keyboard/mouse.

ROMA is similar to walkabout developed by staff at Northern Arizona University. It was developed for and operates only on the Windows architecture. ROMA also has the option of being controlled with a game controller.

Geowall Summary

Geowall's affordable equipment and the low overhead of other startup costs make three-dimensional stereodisplay capabilities available for the first time to a very broad audience. In many cases, this audience has not been exposed to virtual reality or immersive display technologies before. Several display applications are currently available, although most are prototype in nature; the number and types of display applications should expand dramatically in the near future. Geowall systems are not yet mature and require additional software development in the areas of user interfaces, data conversion and ingest utilities, and robust packaging for public venues. As new applications of this technology are discovered, data-specific and application-specific software will also need to be developed. The Geowall is envisioned as a valuable resource for research in the earth sciences and gives educators and the general public access to data in new and exciting ways.

Supporting Investigations

Several investigations supporting visualization for scientific computing were done during the course of this project. These included a high-level investigation of Stanford University's Chromium project, an investigation and subsequent use of IBM's OpenDX visualization software, and the development of file conversion tools for the EDC Geowall systems. Each is briefly described in this section.

Chromium

Stanford University's Chromium is a framework for scalable, realtime rendering on clusters of workstations. It is typically used for tiled displays, rather than stereosetups.

Chromium works by intercepting the client's OpenGL calls and sending them to the compute nodes (called "rendering servers" by Chromium) on a cluster. Each compute node then renders a section of the image in its graphics hardware. The images can be displayed directly from each compute node, as in a tiled display (fig. 18), or they can be redirected back to the client for display (typically on a high-resolution screen).

Chromium is based on Stanford University's WireGL project.

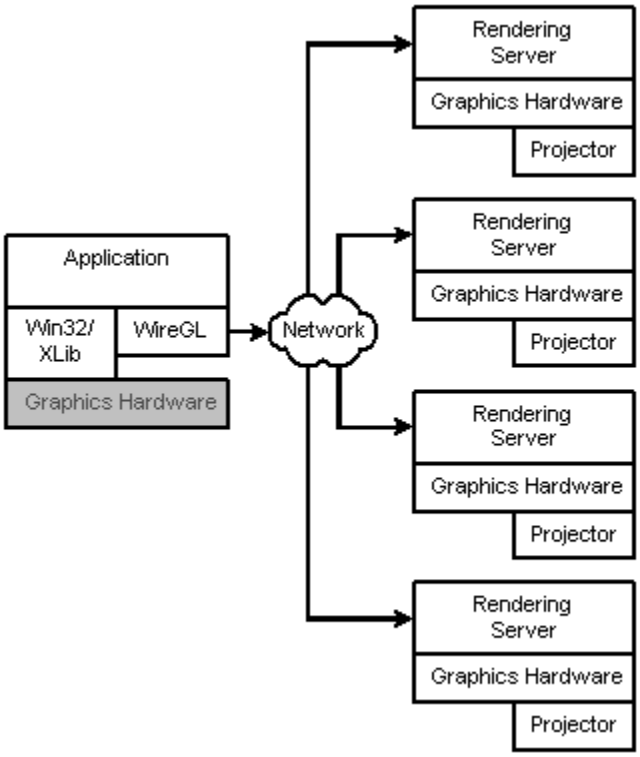

Figure 18. Chromium's setup for tiled displays.

OpenDX

OpenDX is a mature, full-featured software package for the visualization of engineering, scientific, and analytical data. It was introduced in 1991 as IBM's Visualization Data Explorer before being open sourced in 1999 (Thompson and others, 2001).

OpenDX supports both gridded and irregular data. It can handle data on regular grids, warped grids, and scattered points, as well as unstructured data (triangular, quadrilateral, tetrahedral, or cubic meshes). It can also be used with collections of data (groups, series, multizone grids).

"Visual programs" (fig. 19) are created in OpenDX using the data-flow method of programming. Modules are selected and dropped onto a "canvas." The input to and output from each module is connected with a line, representing a wire (and thus shows a "wiring diagram" of the program). A visual program can be divided into separate "pages," which are accessible by tabs at the top of the Visual Program Editor, to divide it into logical sections and avoid clutter.

OpenDX supplies customizable widgets, allowing users to manipulate their data using dials, switches, sliders, menus, and so on. The OpenDX libraries can also be used to make a standalone application that has a custom user interface, with data processing done by the underlying OpenDX modules.

The OpenDX applications programmer interface (API) can be accessed from C, Tcl, or Python. OpenDX also has a scripting language, which can be useful when batch processing is needed. Visual programs are actually saved in this scripting language, so they can be "hand-modified" later.

OpenDX supports several file formats. For data that exist in a "generic" format, the data import wizard is used (fig. 20). OpenDX can also import any raster image that is supported by ImageMagick, the Linux-based image viewing and manipulation program.

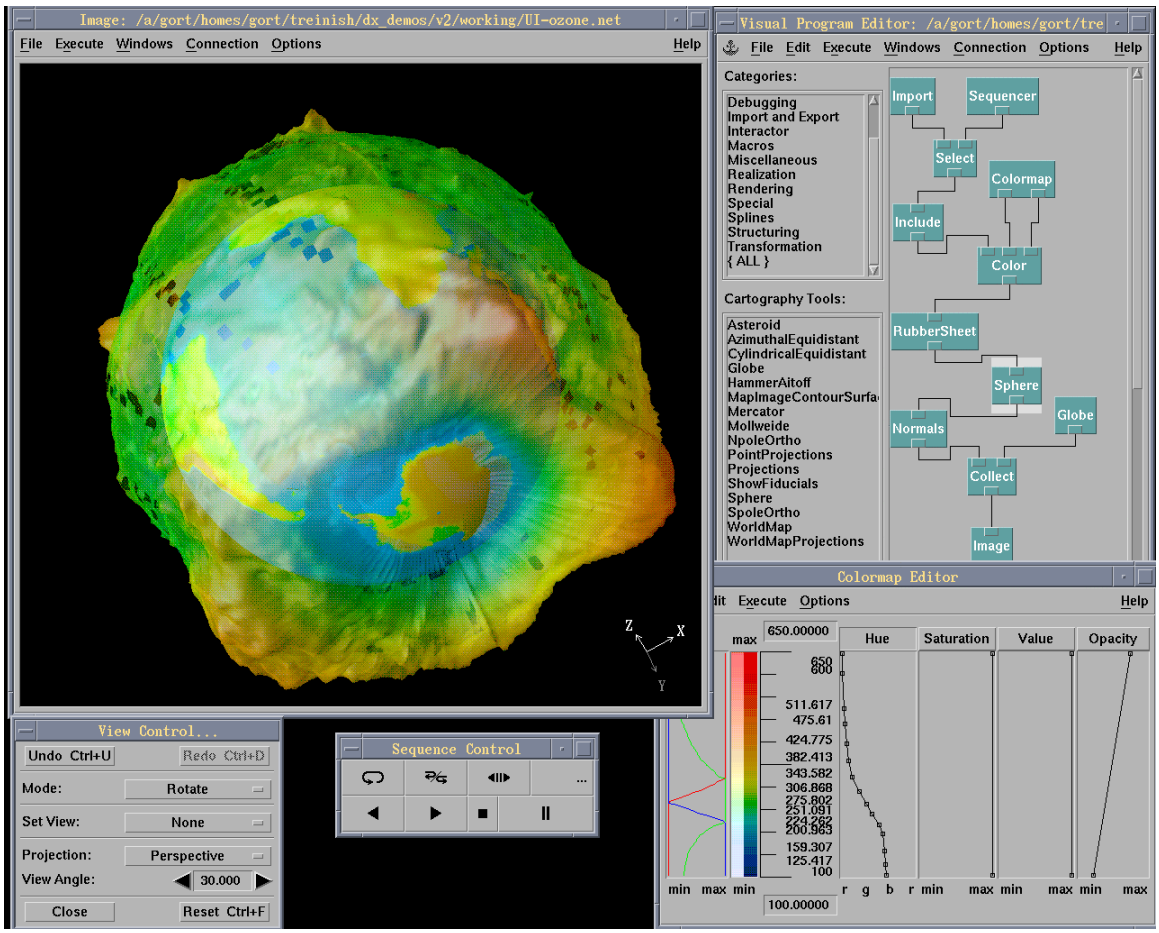

Figure 19. The OpenDX "visual program" display.

Additional converters are also available, such as **gis2dx**, which can produce a native DX file from the following sources:

- **DEM** - USGS digital elevation models
- **DLG** - USGS digital line graphs
- **ERDAS** - ERDAS/LAN (GIS) format
- **MODFLOW** - output of USGS ground-water modeling package
- **ARC** – ESRI Arc/Info formats
- **DXF** – AutoCAD format
- **ArcShape (beta)** – ESRI ShapeFile format
- **ERDAS/IMG (beta)** – ERDAS/Imagine file format
- **Oracle (beta)** – Oracle relational database files

Data can be written to the native DX format, VRML97, or to any raster image format supported by ImageMagick. Animations can be saved to MPEG1 or MPEG2 formats.

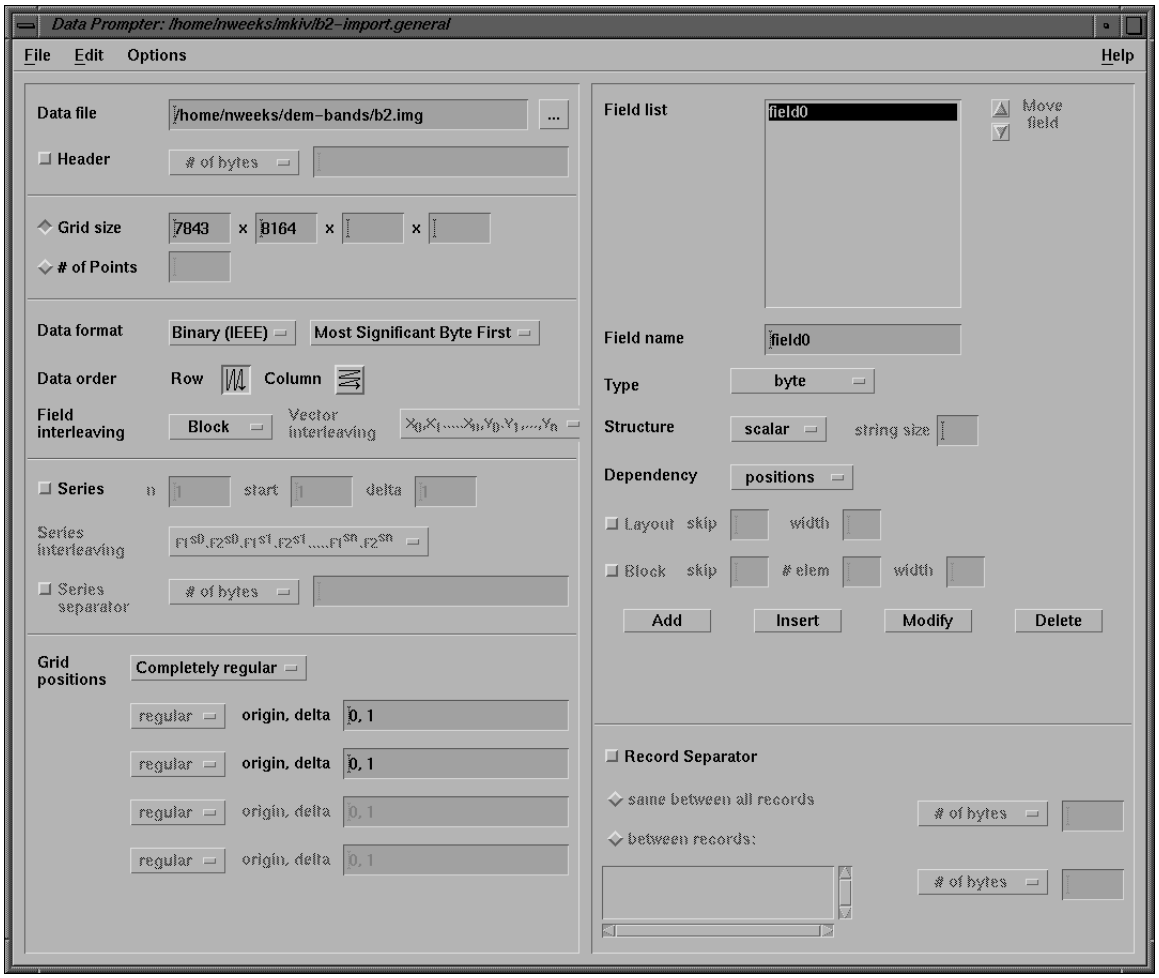

Figure 20. The OpenDX data import user interface.

OpenDX is multiplatform (with binaries existing for Windows 98/ME/NT/2000, Linux, Mac OS X, IRIX, HPUX, AIX, and Solairs). In addition, OpenDX can take advantage of multiprocessor machines, and a certain degree of parallelism can be achieved (for example, data can be stored on one computer, processed on another, and displayed on a third). A version of OpenDX using the Message Passing Interface (MPI), commonly used on Beowulf Clusters and other parallel computer architectures, is being developed.

Mkiv

Mkiv is a command-line utility to map spectral band data onto an elevation model created from DEM data and save the result in the Open Inventor format (fig. 21). The resulting models were used on a Geowall with the Immersaview model viewer.

Mkiv crops the input to a specified dimension, invokes OpenDX in scripting mode, and calls an OpenDX macro, which produces a surface textured with the

given color-band combination. The dx2vrml module is then used to save the result as an Open Inventor file. If ivfix is in the user's path, it is used to optimize the Open Inventor file.

Features:

- 0-3 spectral bands can be specified; each can be used to represent the intensity of a color (red, blue, or green), allowing different band-color combinations.
- Vertical exaggeration can be adjusted
- A rectangular subset of the data can be used
- The number of sample points in the data can be reduced
- The number of polygons in the final output can be reduced
- Light intensity can be altered

Software Requirements:

- Linux or any Unix
- TextureDEMMacro.net
- Python 1.5.2 or greater (http://www.python.org/)
- OpenDX 4.2.0 or greater (www.opendx.org)
- dx2vrml module for OpenDX (http://www.nbb.cornell.edu/neurobio/land/OldStudentProjects/cs490-94to95/ckline/dx2vrml/dx2vrml.html) (Note: All instances of "ERROR_INVALID_DATA" in dx2vrml.c must be changed to "ERROR_DATA_INVALID" because of a change in the OpenDX API. In addition, it was compiled as an inboard module instead of an outboard module.)
- (optional) SGI's ivfix (if optimization of Open Inventor files is desired) (http://oss.sgi.com/projects/inventor/

Input requirements:

- DEM data must be in a flat binary file consisting of signed 2-byte integers (C "short").
- Spectral band data must be in a flat binary file consisting of unsigned 1-byte integers (C "byte").
- Lines and samples of the DEM must equal those of the band files.

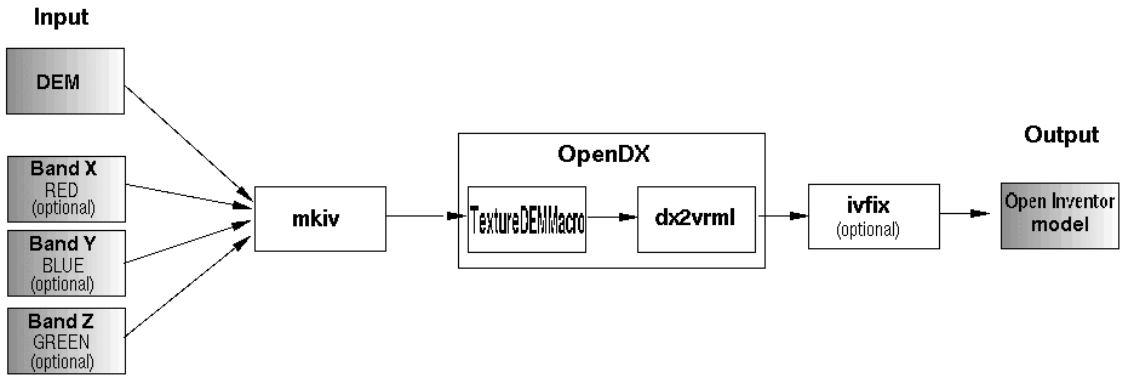

Figure 21. The Mkiv processing flow.

References

Leigh, J., Dawe, G., Talandis, J., He. E., Venkataraman, S., Ge, J., Sandin, D., DeFanti, T.A., 2001, AGAVE : Access Grid Augmented Virtual Environment: Proc. AccessGrid Retreat, Argonne, Illinois, Jan. 16, 2001.

Batson, Edwards, and Eliason, 1976, Synthetic stereo and Landsat pictures: Photogrammetric Engineering and Remote Sensing, v. 42, no. 10, p. 1279-1284.

Crane, M., Steinwand, D., Beckmann, T., Krpan, G., Haga, J., Maddox, B., and Feller, M., 2001, A parallel-processing approach to computing for the geographic sciences: USGS Open-File Report 01-244.

Thompson, D., Braun, J., Ford, R.,2001, OpenDX: Paths to Visualization, First Edition: Visualization and Imagery Solutions, Inc.

Important Web Sites

Geowall: http://www.geowall.org/
StereoPairGen: http://geowall.org/edc/src/StereoPairGen
Chromium: http://sourceforge.net/projects/chromium/
http://graphics.stanford.edu/software/wiregl
OpenDX:

- OpenDX – http://www.opendx.org/
- OpenDX at Dartmouth – http://www.dartmouth.edu/comp/ac/unix/services/dx.html
- Lloyd Treinish (IBM Research) – http://researchweb.watson.ibm.com/people/l/lloydt/
- Cornell Theory Center OpenDX Information – http://www.tc.cornell.edu/services/edu/topics/topics.asp?section=opendx